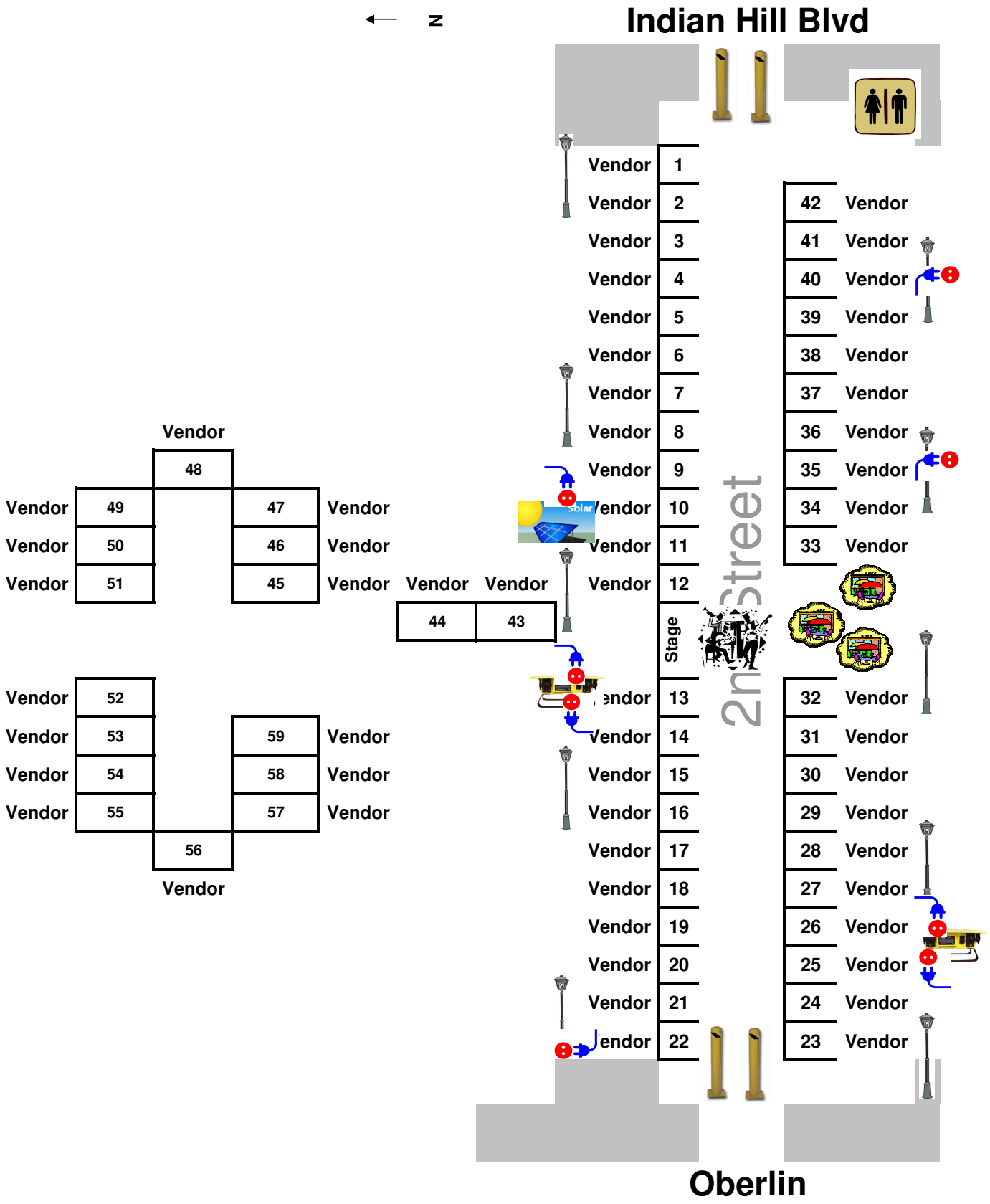

4/20/2010
11:14 PM
Layout 4 20 2010.xls